SECTIUNE TRANSVERSALA/CROSS SECTION
sc. 1:100

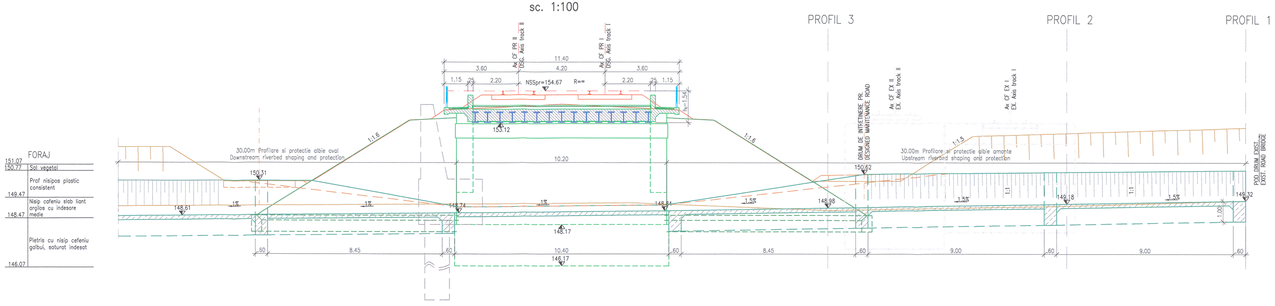

ELEVATIE AVAL/DOWNSTREAM ELEVATION
sc. 1:100

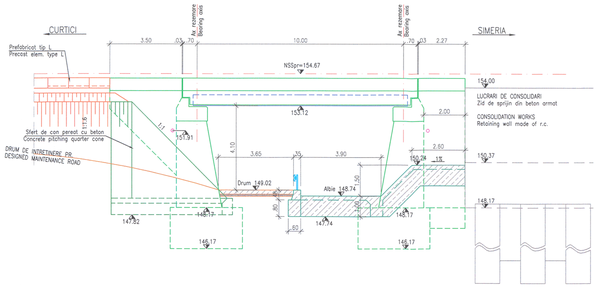

ELEVATIE AMONTE/UPSTREAM ELEVATION
sc. 1:100

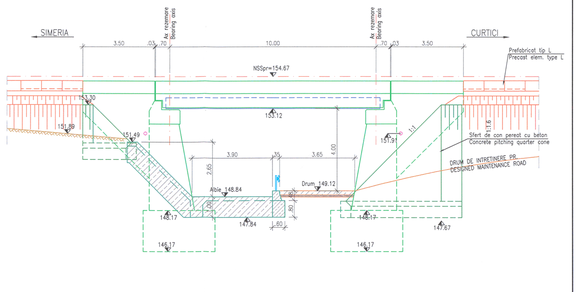

CONVOI DE CALCUL LM71
LOAD MODEL LM71

VEDERE PLANA/PLAN VIEW
sc. 1:100

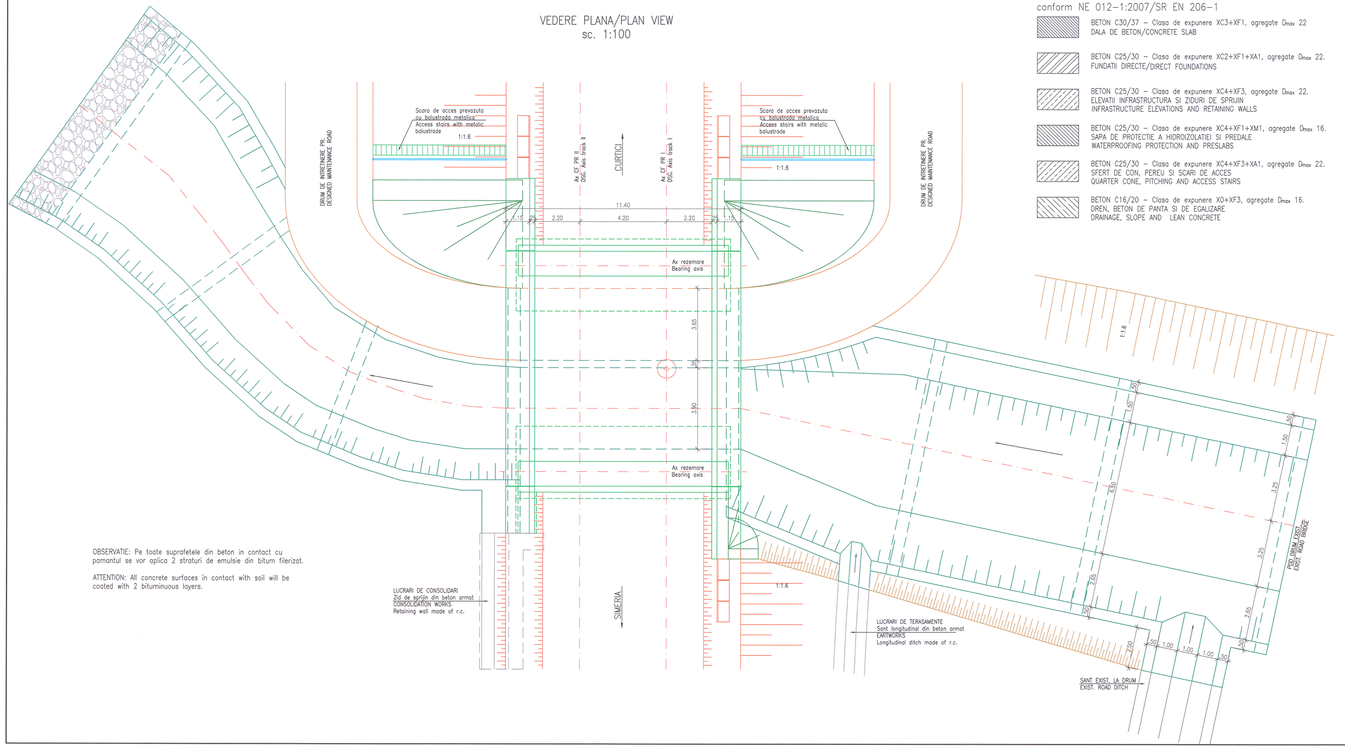

OBSERVATIE: Pe toate suprafetele din beton in contact cu pamantul se vor aplica 2 straturi de emulsie din bitum filerizat.

ATTENTION: All concrete surfaces in contact with soil will be coated with 2 bituminous layers.

LEGENDA BETOANELOR/CONCRETE LEGEND
conform NE 012-1:2007/SR EN 206-1

- BETON C30/37 – Clasa de expunere XC3+XF1, agregate D_{max} 22
  DALA DE BETON/CONCRETE SLAB
- BETON C25/30 – Clasa de expunere XC2+XF1+XA1, agregate D_{max} 22.
  FUNDATII DIRECTE/DIRECT FOUNDATIONS
- BETON C25/30 – Clasa de expunere XC4+XF3, agregate D_{max} 22.
  ELEVATII INFRASTRUCTURA SI ZIDURI DE SPRIJIN
  INFRASTRUCTURE ELEVATIONS AND RETAINING WALLS
- BETON C25/30 – Clasa de expunere XC4+XF1+XM1, agregate D_{max} 16.
  SAPA DE PROTECTIE A HIDROIZOLATIEI SI PREDALE
  WATERPROOFING PROTECTION AND PRESLABS
- BETON C25/30 – Clasa de expunere XC4+XF3+XA1, agregate D_{max} 22.
  SFERT DE CON, PEREU SI SCARI DE ACCES
  QUARTER CONE, PITCHING AND ACCESS STAIRS
- BETON C16/20 – Clasa de expunere XO+XF3, agregate D_{max} 16.
  DREN, BETON DE PANTA SI DE EGALIZARE
  DRAINAGE, SLOPE AND LEAN CONCRETE

DETALIU FUNDATIE SFERT DE CON
QUARTER CONE FOUNDATION DETAIL
Sc. 1:50

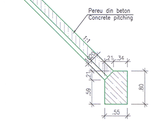

NOTA:
1. Prezentul plan s-a intocmit in baza urmatoarelor date:
- expertiza tehnica;
- studiu topografic;
- studiu geotehnic;
- studiu hidraulic;
- date culese pe teren.
2. Pe traseul de cale ferata proiectat la km 543+983, se vor executa:
- pod tip DOMI cu deschidere de 10,00m, care se racordeaza cu terasamentul amonte si aval cu sferturi de con pereate cu beton.
- parapet metalic de protectie montat pe dala din beton.
- perea din beton pe lungimea podului precum si intre sferturile de con, asigurandu-se astfel o panta de scurgere de min 1%.
- suprafetele de beton vizibile se vor impermeabiliza.
- scari de acces cu balustrade metalice pe terasament.
- podurile de pe traseul existenti KM 547+714 se vor demola.
3. La executie se vor respecta cu stricterea prevederile din:
- Codul de practica pentru executarea lucrarilor din beton, beton armat si beton precomprimat, indicativ NE 012;
- Codul de practica pentru executarea elementelor prefabricate din beton, beton armat si beton precomprimat, indicativ NE 013;
- Normativul pentru verificarea calitatii si receptia lucrarilor de constructii aferente, indicativ C56-85 (C56-2002)
- Caietul de sarcini.
4. Conform H.G. 766/1997 lucrarea se incadreaza in categoria "B" a constructiilor de importanta deosebita.
5. Proiectul va fi verificat de verificatori atestati MLPAT la exigentele A.4, B.2 si D.2.

NOTE:
1. This plan was prepared based on the next data:
- technical expertise;
- topo survey;
- geo-technical study;
- hydraulic study;
- dates on site.
2. On the designed railway route at km 543+983, there will be executed:
- bridge type DOMI with 10.00m span, which will be connected upstream and downstream with concrete pitching quarter cone.
- metallic handrail mounted on the bridge superstructure.
- in the bridge area, as well as between the quarter cones, a concrete pitching will be executed thus ensuring a dischorge slope of min 1%.
- the visible concrete areas will be waterproofed.
- access steps with metallic handrails are provided on the embankment.
- the bridges on the existing railway route will be demolished
3. During execution there will be strictly observed the provisions of:
- Practice code concerning the execution of concrete, r.c. and pre-stressed concrete works, indicative NE 012
- Practice code concerning execution of concrete, r.c. and pre-stressed concrete elements, indicative NE 013;
- Normative concerning the quality check and taking-over of afferent construction work, indicative C56-85 (C56-2002)
- Technical Specifications.
4. Complying with H.G. 766/1997 this structure belongs to category "B" of importance.
5. The project will be verified at A.4, B.2 and D.2 requirements.

PLANURI DETALII GENERALE / GENERAL DRAWING DETAILS	
HIDROIZOLATIE SI ACOPERIR DE ROST WATERPROFFING AND EXPANSION JOINT	PT020200PO019
SISTEM DE DRENARE PODURI BRIDGE DRAINAGE SYSTEM	PT020200PO020
ELEMENT PREFABRICAT TIP L PREFABRICATED ELEMENT TYPE L	PT020200PO021
SCARA DE ACCES SI BALUSTRADA METALICA ACCESS STAIRS AND METALLIC BALUSTRADE	PT020200PO022
PARAPET METALIC PODURI PE BETON METALLIC HANDRAIL FOR BRIDGES, ON CONCRETE	PT020200PO024

RACANEL I. IONUT RADU
ROMANIA
Nr. 07230
AB.B2.D
INGINER
VERIFICATOR PROIECTE

Prezentul plan anuleaza si inlocuieste versiunea anterioara
This plan cancels and replaces previous version

Verificator / Expert Checker / Expert	Cerinta Requirement	Semnatura Signature	Referat / Expertiza Report / Expertise

European Investment Bank

MINISTERUL TRANSPORTURILOR

BENEFICIAR / BENEFICIARY :

COMPANIA NATIONALA DE CAI FERATE "CFR" SA

PROIECTANT / DESIGNER: PÖYRY			Data Date	Semnatura Signature
Aprobat Approved	Sef de echipa Team leader	C. Teodorescu	01.2013	
Verificat Checked	Expert Cheie Key Expert	R. Tudorascu	01.2013	
Subcontractant / Subcontractor: IOTOP				
Aprobat Approved	Adjunct Sef de echipa Deputy Team leader	A.M. Balcu	01.2013	
Proiectat Designed	Inginer Engineer	T. Mihali	01.2013	

"Reabilitarea liniei c.f. Frontier a - Curtici - Simeria, parte componentă a coridorului IV Pan - European pentru circula ția trenurilor cu viteza maximă de 160 km/h"
Tronsonul 2-B : cap Y Bârzava - cap Y Ilteu

"Rehabilitation of the Railway Line Border - Curtici - Simeria , component Part of the IV Pan - European Corridor for the Trains Circulation with maximum speed of 160 km/h"
Section 2-B : end Y Bârzava - end Y Ilteu

Project 9i 35311.1

Faza / Phase: PTH+CS / TD+TS

Denumire desen / Drawing name:
DISPOZITIE GENERALA / GENERAL LAYOUT
POD / BRIDGE KM pr. 543+983 (KM ex. 547+714)

Scara / Scale	Revizia / Revision	Cod desen / Drawing Code	Nr / No
1:50 1:100	1 / 04.2013	PT.02.02.13.PO.03.03	03